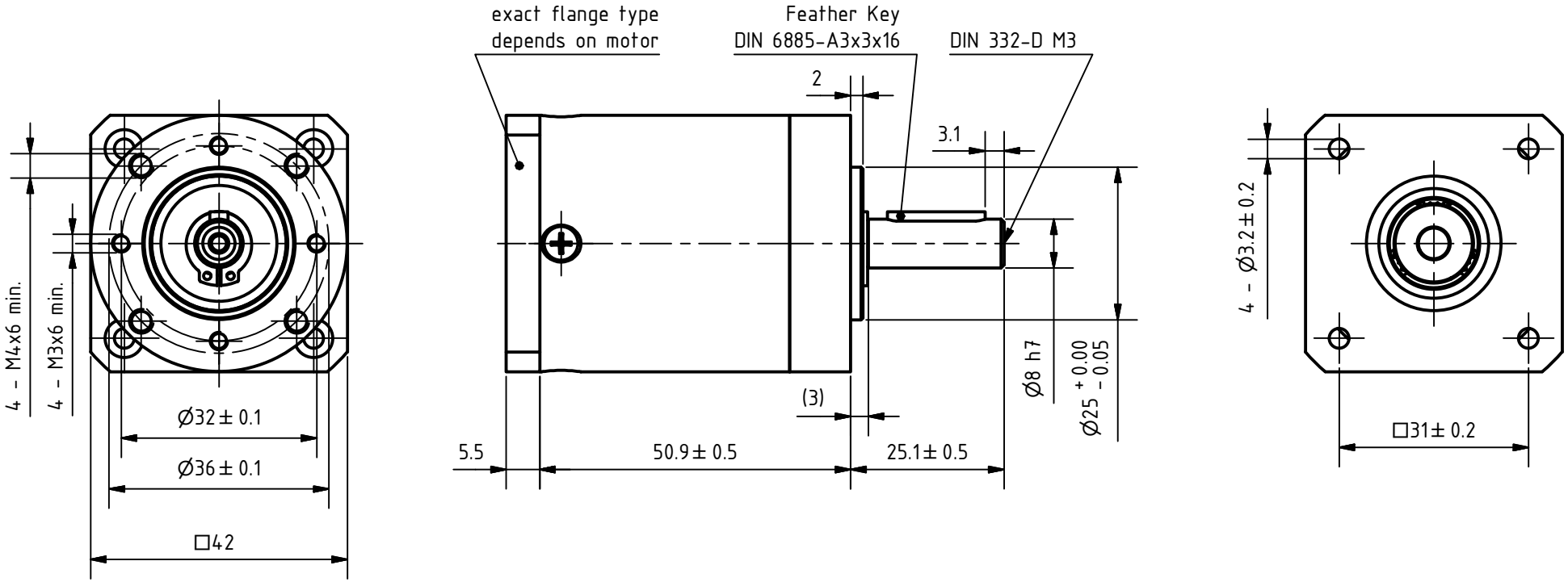

GEARBOX SPECIFICATION		
Reduction Ratio		15 (15.45)
No. of Stages		2
Rated Output Torque	Nm	9.6
Max. Output Torque	Nm	17.7
Rated Input Speed	rpm	3,000
Max. Input Speed	rpm	8,232
Backlash	°	0.82
Efficiency	%	86
Lifetime	h	10,000
Max. Axial Force	N	843
Max. Radial Force (shaft middle)	N	306
Gearbox Inertia	kg m²	0.62×10^{-6}
Ambient Temperature	°C	-15 ... 90
Protection Class		IP54

ISO 8015	ISO 1302	ISO 2768 cK	ISO 13715	Weight: 0.37 kg

	Date	Name
Drawn	06.12.2018	Naubert_A
Checked	06.12.2018	Naubert_A
Approved	06.12.2018	Naubert_A

REV	Rev. Text	Name	Rel. Date
-			

Nanotec® PLUG & DRIVE

GP42-S2-15-SR

12000031

Scale: 1 : 1

A4

State: Work in Progress | Rev: - | P